ACC NR: AT6026912 (A) SOURCE CODE: UR/0000/66/000/000/0076/0082

58
55

AUTHOR: Pokrovskiy, Yu. I.; Vikhrov, V. I.; Perevezentsev, V. N.

ORG: None

TITLE: Study of some radiation defects in metals by measuring internal friction and modulus of elasticity

SOURCE: AN SSSR. Institut metallurgii. Vnutrenneye treniye v metallakh i splavakh (Internal friction in metals and alloys). Moscow, Izd-vo Nauka, 1966, 76-82

TOPIC TAGS: metal analysis, internal friction, elastic modulus, radiation damage, irradiation, nuclear reactor core / RFT reactor core, IRT-1000 reactor core

ABSTRACT: Samples of pure (99.98%) copper, molybdenum and tungsten were irradiated in the operating channel of an RFT reactor core at a flux of 10^{20} neutron/cm^2 and in the channel outside an IRT-1000 reactor core at a flux of 10^{14} neutron/cm^2. Internal friction (Q^{-1}) was measured between stresses of 1-1,000 G/mm^2 with maximum stress amplitude (σ) calculated according to the amplitude of vibrations; change of modulus of elasticity (E), associated with change of Q^{-1} to σ, was studied with respect to change of natural frequency vibrations squared (f_0^2) of sample in relation to σ. For copper, σ_{crit} rose 100 times after irradiation at 10^{20} neutron/cm^2 and Q^{-1} decreased by about 40% with respect to its pre-irradiation values. Changes in

Card 1/2

L 09302-67

ACC NR: AT6026912

3

Q^{-1} and σ_{crit} are explained by reaction of dislocations with spot defects at low neutron dosages, and reaction of dislocations with more complex defects (such as vacancy complexes) at high neutron dosages. This behavior differs from that of Mo and W in that Q^{-1}_{min} for Cu at a flux of 10^{20} neutron/cm^2 decreases while Q^{-1} for both Mo and W increases because these two metals have "free" (unattached to dislocations) spot defects which are absent in Cu. The increase of σ_{crit} for Mo and W may signify that dislocations, such as in Cu, are locked in place by radiation defects. A small increase in σ_{crit} for these metals is associated with the fact that many of the defects formed remain in the lattice because of low mobility of radiation defects in these metals in comparison with the same mobility in copper. Examination of change of modulus of elasticity for the metals under scrutiny showed that neutron irradiation may cause an increase or decrease in elastic modulus (E) for copper in relation to the magnitude of the integrated flux. This E for copper increases with small doses and decreases for large doses. Explanations for changes in modulus of elasticity are quite similar to those for changes in internal friction. Low temperatures, and other forms of radiation (gamma-rays, electrons), can be used to study spot defects by the internal friction method. Orig. art. has: 2 figures and 2 tables.

SUB CODE: 11, 18/SUBM DATE: 02 Apr 66/ORIG REF: 003/OTH REF: 002

nuclear metallurgy

Card 2/2

ACC NR: AP6029795 (N) SOURCE CODE: UR/0069/66/021/002/0092/0096

60
57

AUTHOR: Pravdyuk, N. F.; Vikhrov, V. I.; Pavlov, G. Yu.; Porovsentsev, V. N.

ORG: none

TITLE: Determination of the burnup of the fuel element of the icebreaker "Lenin" from the Cs-137 activity without chemical separation

SOURCE: Atomnaya energiya, v. 21, no. 2, 1966, 92-96

TOPIC TAGS: reactor fuel element, cesium, uranium compound, enriched uranium, reactor neutron flux, gamma neutron reaction

ABSTRACT: The authors determined the distribution of the burn-up along the length of the fuel element by measuring the intensity of the 0.66-Mev gamma lines of the Cs^{137} in the reaction products with a scintillation γ spectrometer with resolution 10--12%. The fuel element tested was made of uranium dioxide with 5.5% enrichment, operated for 428 effective days, and stored for 575 days after removal from the reactor. It was cut in the hot chamber in 11 places and two samples of the uranium dioxide were chosen from each cut. The activity was measured with a scintillation counter in a specially designed pickup (Fig. 1) and the data were processed with a pulse-height analyzer (AI-100) provided with a special information extraction system (VD) developed at the Institute of Atomic Energy im. I. V. Kurchatov by M. P. Sokolov. The calibration of

Card 1/2 UDC: 621.039.548

ACC NR: AP6029795

3

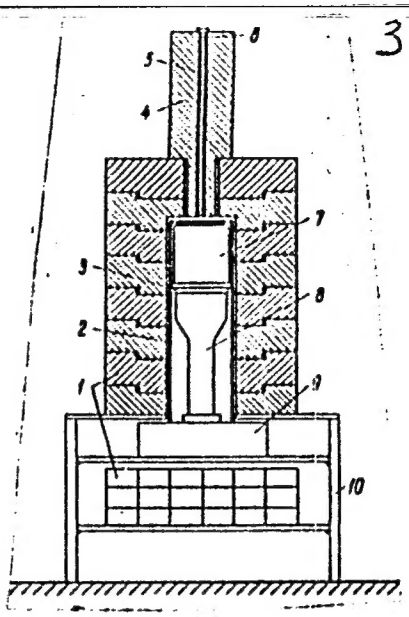

Fig. 1. Diagram of gamma-spectrometer pickup. 1 -- Lead shield, 2 - jacket, 3 - light pipe, 4 - collimator, 5 - copper tube, 6 - target, 7 - NaI(Tl) crystal, 8 - photomultiplier, 9 - cathode follower, 10 - support

the apparatus and the processing of the results are described, and the integral flux of the thermal neutrons and the burnup rate are calculated. It is concluded that the method can be used to determine the relative distribution of the burnup, after suitable cooling of the fuel element with accuracy ±6% and the absolute burn-up value with accuracy ±16%. The authors thank N. M. Mordvinov for a discussion of the results, and A. A. Markov and M. P. Sokolov for practical aid in preparing the system for information extraction. Orig. art. has: 4 figures, 11 formulas, and 2 tables

SUB CODE: 18/ SUBM DATE: 01Feb66/ ORIG REF: 006/ OTH REF: 001

Card 2/2 BP

VIKHROV, V. YE.

PROCESSES AND PROPERTIES INDEX

Microphotographic measurement of the units of vegetable fibers. V. E. Vikhrov. *Bumazhnaya Prom.* 17, No. 10, 29-31 (1939).—A single procedure is suggested for projecting a magnified microscope image of a stained prepn. on a photographic paper and measuring the fiber units with the aid of a calibrated plate. Chas. Blanc

ASM-SLA METALLURGICAL LITERATURE CLASSIFICATION

VIKHROV, V. Ye.

"The Microscopic Structure of the Annual Layer of the Siberian Larch (Larix sibirica Ledeb.)" Doklady Akad Nauk, Vol 58, No. 8, 180.-1803 (1947)

VIKHROV, V. Ye. and BAZHENOV, V. A.

"The Moisture Content of Wood in the Trunks of Deciduous Trees"
Doklady Akad. Nauk SSR, 60, #3, 489-91 (1948)

VIKHROV, V. Ye.

"Physicomechanical Propetties of Elm Wood Pulp", Doklady Akad. Nauk SSSR, 65, No. 1, 101-104 (1949)

Inst. of Forestry, Dept Biol Sci. AS USSR

VIKHROV, V. Ye.

"The Physico-Mechanical Properties of the Wood of Early- and of Late-Leafing Forms of Oak", Doklady Akad. Nauk SSSR, 72 No. 1, 169-72 (1950)

VIKHROV, V. Ye.

VIKHROV, V. Ye. - "Structure and Physicomechanical Properties of Oak Wood in Connection With Vegetation Conditions." Sub 15 May 52, Inst of Forestry, Acad Sci USSR. (Dissertation for the Degree of Doctorates in Agricultural Sciences)

SO: Vechernaya Moskva January-December 1952

VIKHROV, V.Ye.; EN'CHOVA, E.I.

OAK

Dynamics of growth and quality of timber in early and late blooming oak. Les. khoz. 5 no. 9, 1952.

Monthly List of Russian Accessions, Library of Congress, November 1952. UNCLASSIFIED

VIKHROV, V. Ye.; TUMANYAN, S.A.

Anatomical structure and physicomechanical properties of the wood of oak roots. Izv.AN Arm.SSR.Biol.i sel'khoz.nauki 6 no.11:27-43 '53. (MLRA 9:8)

1. Institut lesa AN SSSR, Moskva i Botanicheskiy institut AN Arm. SSR, Yerevan.

(Oak) (Roots--Anatomy) (Wood)

VIKHROV, V. E.

USSR.

[illegible] and physico-chemical properties [illegible] and compressed wood. [illegible] Tr. Lesotekh. Inst. [illegible] (1957). The [illegible] and mech. properties of the anti[illegible] (II) of Quercus [illegible] wood. In [illegible] strength [illegible] of the tested specimens, [illegible] for I and [illegible] 2, 3/2, and 7/2 for II. The [illegible] 15.9, 5.1, and 11.0. The [illegible] The rel. % of wood, I and II, plus [illegible] and wood par. adhesive plus no delivery [illegible] 41, 39, and 17 for I and 10, 65, and 25 for II. [illegible] were made on 0.5-1 × 1 × 55-mm test [illegible] I, II, and whole wood. For oven-dry I and II, [illegible] 2.0; d. above fiber satn. point (f.s.p.) 1.01 (11%), [illegible] and 0.91 (67%) H_2O; max. vol. shrinkage 19.4 and [illegible]; max. tangential shrinkage 8.4 and 11.7%; max. radial shrinkage 4.0 and 5.0%; static bending strength [illegible] 711 and 1930 at 9-10% H_2O and 422 and [illegible] limit of plastic flow in static bending [illegible] 197 and 1003 at 9-10% H_2O and 226 and [illegible] and tensile strength (in kg. per sq. cm.) parallel to the grain 500 and 1525. The max. tangential and radial shrinkage of the whole wood was 9.5 and 5.0%.

John Lake Keays

USSR

USSR

The moisture content of healthy and fungus-infected wood in the boles of growing trees. S. I. Vanin, V. A. Bazhenov, and V. E. Vikhrov. *Trudy Inst. Lesa, Akad. Nauk S.S.S.R.* 9, 235-97(1937).—Data are given on the moisture distribution and degree of fungal attack at various bole heights in 50-60-year-old aspens (I) infected with *Fomes igniarius*, and in 40-45-year-old oaks (II) infected with *Polyporus dryophilus*, *P. sulphureus*, and *F. robustus*. I showed the highest percentage of H_2O in the 1st stage of attack and the lowest in the 3rd stage; II showed no relationship between percentage of H_2O and degree of attack.

John Lake Keays

2

VIKHROV, V.B.

USSR

Physicomechanical properties of the wood of Ulmus scabra. V. B. Vikhrov. *Trudy Inst. Lesa, Akad. Nauk S.S.S.R.* 9, 419-22(1953).—*U. scabra* from the Voronezh Tellerman forest had the following properties: 6.5 growth rings per cm., 71% summerwood, d. 0.66 at 15% H_2O, coeff. of vol. shrinkage 0.51%, compression strength parallel to the grain 485 kg. per sq. cm., static bending strength 947 kg. per sq. cm., and impact strength 0.40 kg. per cc. In general the strength characteristics of I are quite similar to those of *U. alba*. Physicomechanical properties of the wood of Fraxinus excelsior. *Ibid.* 423-30.—*F. excelsior* (age 50-60 years) from the Voronezh Tellerman forest had the following properties: d. at 15% H_2O 0.771, 6.6 growth rings per cm., 68% summerwood, coeff. of shrinkage (in %) on drying 0.197 and 0.312 in radial and tangential direction, compression strength parallel to the grain 607 kg./sq. cm., static bending strength 1242 kg./sq. cm., impact strength in kg./cc. 0.463, tensile strength 1773 kg./sq. cm.; and cleavage strength [illegible] kg./sq. cm. in the tangential and radial planes.

John Lake Kenyo

VIKHROV, V. E.

Structure and the physical properties of oak wood. Moskva. Akademiia nauk SSSR, 1964. 262 p.

1. Oak.
2. Wood

VIKHROV, Viktor Yevgrafovich, prof.; PERELYGIN, L.M., otv.red.; ~~CHISTYAKOVA, O.M.~~, red.izd-va; POLYAKOVA, T.V., tekhn.red.

[Identifying characteristics of the wood of species of prime importance to forestry and the lunber industry of the U.S.S.R.] Diagnosticheskie priznaki drevesiny glavneishikh lesokhoziaistvennykh i lesopromyshlennykh porod SSSR. Moskva, Izd-vo Akad.nauk SSSR, 1959. 131 p. (MIRA 12:4)

(Wood--Anatomy)

MOSKALEVA, V.Ye.; VIKHROV, V.Ye., doktor sel'skokhozyaystvennykh nauk, otvetstvennyy redaktor; KOPNOV, Ye.V., redaktor izdatel'stva; POLYAKOVA, T.V., tekhnicheskiy redaktor

[Structure of wood and its modification under physical and mechanical influences] Stroenie drevesiny i ego izmenenie pri fizicheskikh i mekhanicheskikh vozdeistviiakh. Moskva, Izd-vo Akad.nauk SSSR, 1957. 164 p. (MLRA 10:8)
(Wood)

VIKHROV, V. Ye.

KALNIN'SH, Arvid Ivanovich; VIKHROV, V.Ye., otvetstvennyy red.; KANTOR, I.A., red.izd-va; MAKUNI, Ye.V., tekhn.red.

[Lumber decay protection in rural building] Protivogniloatnaia zashchita lesomaterialov v sel'skom stroitel'stve. Moskva, Izd-vo Akad. nauk SSSR, 1958. 149 p. (MIRA 11:3)
(Wood—Preservation)

VIKHROV, V. Ye., Prof., Dr.
Forestry Inst., AS USSR

"Study of the Structure and Technical Properties of Wood with Respect to the Growing Conditions of the USSR," Acta Botanica Sinica, Vol. 3, No. 2, June 1958, p 108.

VIKHROV, V.Ye. [Vikhrau, V.E.], doktor sel'skokhoz.nauk

On the strength of wood. Vestsi AN BSSR.Ser.biial.nav. no.2:12-19 '62. (MIRA 15:8)

(TREES, FOSSIL)

VIKHROV, V.E.

PERELYGIN, L.M., prof.; VIKHROV, V.Ye.; red.; SIDOROVA, V.I., red.izd-va; POPRYADUKHIN, K.A., tekhn.red.

[Wood, its structure and properties] Drevesinovedenie. Moskva, Gos. izd-vo "Sovetskaia nauka," 1957. 361 p. (MIRA 11:2)
(Wood)

VIKHROV, V.Ye.; PROTASEVICH, R.T.; Prinimala uchastiye KOSTAREVA, L.A., laborantka

Wood structure of the dwarf elm Ulmus pinnato-ramosa Dieck and the green ash Fraxinus lanceolata Borkh. growing in Solonetz and Chernozemlike soils. Nauch. dokl. vys. shkoly; biol. nauki no.1:120-125 '64. (MIRA 17:4)

1. Rekomendovana kafedroy drevesinovedeniya Belorusskogo tekhnologicheskogo instituta.

VIKHROV, Viktor Yevgrafovich ; LOBASENOK, Artemiy Kuz'mich; MINCHUKOVA, T.G., red.; MORGUNOVA, G.M., tekhn. red.

[Technical properties of wood as related to forest types] Tekhnicheskie svoistva drevesiny v sviazi s tipami lesa. Minsk, Izd-vo M-va vysshego, srednego spetsial'nogo i professional'nogo obrazovaniia BSSR, 1963. 71 p. (MIRA 16:5)

(Wood)

VIKHROV, V.Ye.

Use of wood in the Neolithic period. Sbor. bot. rab. Bel. otd. VBO no.2:20-31 '60. (MIRA 15:1)
(Stone age) (Wood)

06194
SOV/115-59-11-22/36

9 (2)

AUTHOR: Vikhrov, G.P.

TITLE: A Transistorized Universal Electronic Counter

PERIODICAL: Izmeritel'naya tekhnika, 1959, Nr 11, pp 49-52

ABSTRACT: The author describes an electronic counter with a capacity of $10^{-5} \div 1$. The block diagram of this transistorized counter is shown in Fig 1. The device was designed for measuring frequencies ($10^{-5} \div 1.5 \cdot 10^{5}$ cps) and time intervals ($10^{-4} + 10^{5}$ sec), and electrical signals with an error below $\pm 2 \cdot 10^{-5} \pm 1$ count. Frequency measurements are reduced to counting the number of pulses, equal to the number of cycles of the input signal, during a time interval which is known with sufficient accuracy and which is determined by a quartz oscillator. The author describes in detail the different possible operating conditions. A control circuit is used for checking the accuracy of the counter. One of the most important parts is the conversion unit which converts the binary counting system

Card 1/2

06194
SOV/115-59-11-22/36

A Transistorized Universal Electronic Counter

with a factor K = 16 to the decade system with a counting factor of K = 10. The principal circuit arrangement of this unit is shown in Fig 3. It consists of four binary cells. Each cell is a conventional transistorized trigger circuit with P13A transistors. In the socalled "cycle generator" P201 and P13 transistors are used. The shaping unit is composed of P-13 transistors. It converts input signals of any shape to pulses with the required stable parameters. This unit is composed of Schmitt trigger circuits and functions similar to a vacuum tube trigger circuit. The electronic counter is 440x180x195 mm and has a weight of 8 kg. It has a power consumption of only 0.5 watts and may be used in laboratories and under field conditions. Engineers A.A. Avizhen', K.I. Sakalauskas, A.A. Chervyakov, L.Ya. Kovaleva and S.A. Yushka participated in the development of the counter. There are 1 block diagram and 2 circuit diagrams.

Card 2/2

VIKHROV, L. A.

USSR/Engineering - Tools

Card 1/1 Pub. 103 - 11/23

Authors : Grebennikov, O. F.; Vikhrov, L. A.; and Akinin, E. Ya.

Title : A device for rolling threads with two part-adjustable dies

Periodical : Stan. i instr. 10, 24-26, Oct 1954

Abstract : The editorial gives some information on rolling threads with two part-adjustable dies (drum and split-ring). A description of the above mentioned dies is presented, together with tables giving technical specifications. Three USSR references (1949-1951). Drawings; diagram.

Institution : ...

Submitted : ...

VIKHROV, L.A.

GREBENNIKOV, O.F.; VIKHROV, L.A.; AKININ, Ye.Ya.

Device for thread rolling by means of a drum and a half ring.
Stan. i instr. 25 no.10:24-26 O '54. (MLRA 7:11)
(Screw-cutting machines)

USSR / Microbiology. General Microbiology. F-1

Abs Jour : Ref Zhur - Biol., No 20, 1958, No. 90751

Author : Buyanovskaya, I. S.; Vikhrova, N. M.; Andreyeva, N. A.
Inst : Not given
Title : A Study of the Antibacterial Spectrum of an Antibiotic, Actinoxanthine, Using Different Methods of Derivation

Orig Pub : Antibiotiki, 1957, 2, No 1, 17-21

Abstract : By the method of two-fold serial isolations on MPB having a pH of 7.2 - 7.4 one determined the activity of the culture fluid of actinomycetes No. 1131 and of the preparation of actinoxanthine I in various stages of purification conducted by different processes. In the actinomycetes culture fluid not less than 3 antibiotic substances were observed, of which I did not affect Gram-negative microorganisms and was active in respect to Gram-positive microbes such as staphylococci which were resistant to other

Card 1/2

USSR / Microbiology. General Microbiology. F-1

Abs Jour : Ref Zhur - Biol., No 20, 1958, No. 90751

antibiotics. With the determined method of chemical purification I possessed high anti-tumor activity in in vitro and in vivo experiments. -- S. M. Navashin

Card 2/2

POGORELOV, G.; IVANENKO, I.; TROITSKIY, N.; VIKHROV, P.; VASIL'YEVA, V.

Discussing the draft of the Basic Principles of Labor Law of the U.S.S.R. and the Union Republics. Okhr.truda i sots.strakh. 3 no.3:33 Mr '60. (MIRA 13:7)

1. Tekhnicheskiye inspektora Moskovskogo oblastnogo soveta profsoyuzov.
(Labor laws and legislation)

POGORELOV, G.; TROITSKIY, N.; IVANENKO, I.; VASIL'YEVA, V.; VIKTOROV, P.

Old shortcomings in the new equipment. Okhr.truda i sots. strakh. no.12:29-30 D '59. (MIRA 13:4)

1. Tekhnicheskiye inspektora Moskovskogo oblastnogo soveta profsoyuzov.
(Moscow--Textile industry--Hygienic aspects)

MODESTOVA, T.A. [redaktor]; VIKHROV, P.G.; SHELIKHOV, N.N.

[Textile science for the sewing industry] Materialovedenie shveinogo proizvodtsva. Pod red. T.A.Modestovoi. Moskva, Gos.nauchno-tekhn.izd-vo legkoi promyshl., 1953. 185 p. (MLRA 6:8)

(Textile fabrics)

MODESTOVA, Tat'yana Alekseyevna; VIKHROV, Pavel Georg'yevich; SHELIKHOV, Nikolay Nikolayevich; SOSULINA, V.N., redaktor; MEDVEDEV. L.Ya., tekhnicheskiy redaktor

[Textile fabrics and sewing supplies; merchandise guide for the clothing industry] Materialovedenie shveinogo proizvodstva. Moskva, Gos. nauchno-tekhn. izd-vo Ministerstva promysh. tovarov shirokogo potrebleniia SSSR. 1955. 190 p. (MLRA 8:6)
(Textile fabrics) (Sewing--Equipment and supplies)

YAKOVLEV, M.F.; VASIL'YEVA, V.A.; VIKHROV, P.P.; IVANENKO, I.P.; POGORELOV, G.I.; TROITSKIY, N.L.

General inspection of the work organization level in factories. Tekst.prom. 20 no.6:51-53 Je '60. (MIRA 13:7)

1. Nachal'nik podotdela organizatsii truda Mosoblsovnarkhoza (for Yakovlev). 2. Tekhnicheskiye inspektora Moskovskogo otdeleniya soveta profsoyuzov pri obkome profsoyuza rabochikh tekstil'noy i legkoy promyshlennosti (for all except Yakovlev).
(Moscow Province—Textile factories)

VIZHROV, V.I., general-mayor aviatsii.

The battle of Stalingrad. Vest. Vozd. Fl. 40 no.10:30-36 O '57.
(Stalingrad, Battle of, 1942-1943) (MIRA 11:2)

S/089/61/010/004/003/027
B102/B212

21.6200

AUTHORS: Pravdyuk, N. F., Pokrovskiy, Yu. I., Vikhrov, V. I.

TITLE: Effect of neutron bombardment on the internal friction of monocrystalline and polycrystalline zinc

PERIODICAL: Atomnaya energiya, v. 10, no. 4, 1961, 347-352

TEXT: N. F. Pravdyuk has already reported in a lecture (Second Atomic Conference at Geneva 1958) about investigations of internal friction and of the critical amplitude of the maximum tension σ_{cr} before and after neutron bombardment of metals, and also of the influence of the orientation of the basal plane (0001) to the longitudinal axis of monocrystalline zinc. The method and equipment used have also been described there. This paper publishes additional results which have been obtained with monocrystalline and polycrystalline zinc. (σ_{cr} is that value of the maximum tension amplitude, at which internal friction starts to be a function of the tension amplitude). The monocrystalline specimens showed the following orientations of the (0001) planes to the longitudinal axis: 15, 40, 66, 76, 86, and 88°;

Card 1/9

22600

specimens with 15, 40, 76, and 86° orientation have been exposed to neutron radiation. The internal friction has been measured at transverse oscillations (300 cps) before and after neutron bombardments having integral fluxes of $3 \cdot 10^{18}$ and $1.5 \cdot 10^{19}$ n/cm^2 and at a ratio of fast to thermal neutrons of 1 : 10. The amplitude of the maximum tension has been calculated from the oscillation amplitude. The results are represented graphically. Fig. 1 shows the change of internal friction as a function of the tension amplitude of non-irradiated monocrystalline zinc at angles θ given above the curves; the figures given below are the values of σ_{cr}. Fig. 2 shows the same for neutron-bombarded ($3 \cdot 10^{18}$ n/cm^2) monocrystals. Fig. 4 shows the change of the minimum internal friction of monocrystalline zinc as a function of the angle θ, and Fig. 5 shows the functions $\sigma_{cr}(\theta)$ - both for monocrystals before and after bombardment. The following numerical values have been obtained:

σ_{cr}	15°	40°	66°	76°	86°	88°
before bombardment	105	20	40	120	400	600
after bombardment ($3 \cdot 10^{18}$ n/cm^2)	200	100	-	200	500	-
after bombardment ($1.5 \cdot 10^{19}$ n/cm^2)	350	280	-	-	550	-

The theoretical value is given as $\sigma_{cr} = 2\tau_{cr}/\sin 2\theta$, where $\tau_{cr} = \sigma_{cr}\cos\varphi\sin\theta$; τ denotes the tangential stress given by $(P/A)\cos\varphi\sin\theta$; and $P/A = \sigma_{cr}$. The notations are shown in Fig. 6: θ denotes the angle between the line of application of the force and the glide plane; φ represents the angle between the direction mm of a possible displacement in the glide plane and the axis of the specimen; nn denotes the normal on the glide plane. It has been found that the value of σ for bombarded specimens may be connected to the start of shift of dislocations along the basal plane. Fig. 7 shows $1/Q = f(\sigma)$ for non-irradiated (1) and irradiated (2) polycrystalline zinc; the irradiation has been done with $3\cdot10^{18}$ n/cm^2. The experimental curves are discussed in detail. One may imagine that the curves $1/Q = f(\sigma)$ consist of three sections: 1) $\sigma<\sigma_{cr}$; 2) $\sigma>\sigma_{cr}$; 3) $\sigma\gg\sigma_{cr}$. The first two sections are the parts with reproducible internal friction, and the third one is that with irreproducible friction. The authors thank S. T. Konobeyevskiy for discussions. There are 7 figures, 1 table and 1 Soviet-bloc reference.

SUBMITTED: November 14, 1960

Card 3/9

PRAVDYUK, N.F.; POKROVSKIY, Yu.I.; VIKHROV, V.I.

Effect of neutron radiation on the internal friction of monocrystalline and polycrystalline zinc. Atom.energ. 10 no.4:347-352 Ap '61. (MIRA 14:4)

(Zinc) (Neutrons)

86-10-21/44

AUTHOR: Vikhrov V.I., Maj.Gen. of the Air Force

TITLE: The Stalingrad Battle (V bitve pod Stalingradom)

PERIODICAL: Vestnik Vozdushnogo Flota, 1957, Nr 10, pp. 30-36 (USSR)

ABSTRACT: In the summer campaign of 1942, the German command concetrated about 240 divisions against Soviet army, the main bulk of which was operating on the Stalingrad direction. The main grouping of these forces included: the 6th field army, 4th tank army, and the 4th air fleet (containing 1200 aircraft i.e. nearly half of the whole German air force). Thus, the enemy succeeded to concentrate considerable numerical superiority in forces and technical combat means.

Card 1/4

86-10-21/44

The Stalingrad Battle (Cont.)

Despite this superiority, the Soviet army was able to hamper the enemy movements and to gain the time neccessary for preparation of counteroffensive. The Soviet 62nd army, under the command of Gen Chuykov, was defending the Stalingrad front. The Soviet aviation participated in defense of Stalingrad under extremely difficult conditions. The enemy by filling up constantly his losses, was able to maintain at the Stalingrad front 2-3 times superior air force (800-1000 aircraft). The Soviet command, preserving its aviation forces, used them only for the most decisive operations. Taking into consideration the numerical inferiority of the Soviet aviation, there was developed a special tactic of the aviation night operations, which was harassing the enemy relentlessly and many times succeeded to frustrate his offensive preparations. During the day the Soviet bombers operated from high altitudes and the shturmoviks from the medium heights, thus reducing the possibility of losses from the German fighters. At that period

Card 2/4

86-10-21/44

The Stalingrad Battle (Cont.)

Soviet pilots applied new air tactics for instance, attack of shturmoviks on a closed circle. During the Stalingrad battle the control of air combat became perfected thanks to a larger use of radio communications from the ground to pilot and vice versa. The first radio control post together with aviation division command station was installed in August 1942 at the North outskirts of Stalingrad. Thus the divisional commander was able to conduct the air combat and guide his pilots. Already, in September 1942, at the Stalingrad front the Soviet aviation established a reliable radiocommunication network, observation, early warning, communication and guidance system. Only in the second half of October 1942 in the region of Burkovskiy the fighters were called by radio from their airfield 95 times and 125 times they were radio guided against the enemy bombers. During 20 days of combat 315 enemy aircraft operations were destroyed, mostly fighters. Gradually, at the Stalingrad front the initiative in the air combat was wrested from the enemy. The fighter command received new types of aircraft: Yak-7 and La-5 equal in combat qualities to those of the enemy. Finally, during the Soviet

Card 3/4

The Stalingrad Battle (Cont.) 86-10-21/44

counter offensive at the Stalingrad front the Soviet aviation was active in destruction of encircled German grouping and frustrated the German plan of air evacuation of the encircled troops. The German 330,000 strong army was liquidated on the banks of the river Volga. In this great victory the Soviet aviation got a very important share.

AVAILABLE: Library of Congress

Card 4/4

DIKMAROV, S.V., inzh.; ALFEROV, V.Ye., inzh.; VIKHROV, V.P., inzh.

Retention of optimum operating conditions of power transformers of industrial enterprises. Prom. energ. 19 no. 4: 5-7 Ap '64. (MIRA 17:5)

VIKHROV, V.Ye.; KOSTAREVA, L.V.

Anatomical structure of the wood of roots in some conifer species. Bot. zhur. 45 no.9:1259-1270 S '60. (MIRA 13:9)

1. Institut lesa AN SSSR, Moskva.
(Roots (Botany)--Anatomy) (Coniferae)

VIKHROV, V.Ye.

Features of the microstructure of wood from the roots of certain conifers. Dokl.AN BSSR 4 no.2:74-77 F '60. (MIRA 13:6)

1. Predstavleno akademikom AN BSSR I.D. Yurkevichem.
(Wood--Anatomy) (Roots(Botany))

IVANOV, Yu.M.; BAZHENOV, V.A.; VIKHROV, V.Ye., prof., doktor sel'skokhoz.nauk, otv.red.; KUZNETSOVA, Ye.B., red.izd-va; DOROKHINA, I.N., tekhn.red.

[Testing physical properties of wood; elasticity, permeability to air, and swelling pressure] Issledovaniia fizicheskikh svoistv drevesiny; elastichnost', vozdukhopronitsaemost', davlenie nabukhaniia. Moskva, Izd-vo Akad.nauk SSSR, 1959. 73 p. (MIRA 13:3)

(Wood--Testing)

IVANOV, Yu.M.; BAZHENOV, V.A.; VIKHROV, V.Ye., prof., doktor sel'skokhoz. nauk, otv.red.; KUZNETSOVA, Ye.B., red.izd-va; DOROKHINA, I.N., tekhn.red.

[Investigation of the physical properties of wood; elasticity, permeability to air, pressure of swelling] Issledovaniia fizicheskikh svoistv drevesiny; elastichnost', vozdukhopronitsaemost', davlenie nabukhaniia. Moskva, Izd-vo Akad.nauk SSSR, 1959. 73 p. (MIRA 13:1)

(Wood--Testing)

CA

Condensation of alcohols with aromatic hydrocarbons in the presence of anhydrous aluminum chloride. III. Condensation of primary alcohols with benzene and toluene. I. P. Lukashevich and G. Vikhirova. *J. Gen. Chem.* (U. S. S. R.) 7, 632-6(1937); *C. A.* 31, 4424 and preceding abstr. - The condensation of C_6H_6 and PhMe with primary alcs. proceeds more difficulty than with secondary alcs., requiring a large excess of $AlCl_3$ (1.5-2 mols. for 1 mol. of alc.) and longer heating (4-10 hrs.) at higher temps. (110-40°). At optimum conditions 80-94% of mixed alkylated products and no unsatd. hydrocarbons are formed. Greater $AlCl_3$ concn. and higher temps. increase the formation of polyalkyl derivs. The dialkylhydrocarbons are mixts. of *p*- and *m*-isomers with the latter as a chief reaction product (cf. Shoesmith and McGechen, *C. A.* 25, 283). PhMe is generally more reactive. With MeOH it gives products of various degrees of alkylation, while C_6H_6 fails to react. The 2-stage condensation (prepn. of Al alcoholate and heating it with C_6H_6 or PhMe) resulted in smaller yields of alkylated hydrocarbons. The nature of the diethylbiphenyl, $Et(C_6H_4)_2Et$ (II), $(C_6H_5)_3Et$ (I) and diethyltriphenyl, $Et(C_6H_5)_2Et$ (III), formed from C_6H_6 and EtOH, is being investigated. Unless otherwise stated, the values given below after the b. p. are for d_4^{20}, n_D^{20} and M. R., resp. Heating 16 g. (½ mol.) EtOH, 87 g. (½ mol.) $AlCl_3$ and 120 g. C_6H_6 at 120-30° for 10 hrs. resulted in 48.5% PhEt, bp. 134-6°, 0.8722, 1.4957, 35.48 and 35% of polyalkylbenzenes. This redistd. gave *m*-$C_6H_4Et_2$, bp. 179-80°, 0.8636, 1.4978, 44.71; $C_6H_4Et_3$, bp. 218-17°, 0.892, 1.5035, 54.05, mol. wt. 170 (calcd. 190); $C_6H_3Et_4$, b. 240-50°, 0.9000, 1.5022, 63.28, mol. wt. 196 (calcd. 190); I, b. 290-300°, 0.998, 1.5025, 68.28, mol. wt. 296 (calcd. 210), and II m. 290°. From 30 g. (0.5 mol.) PrOH, 87 g. (½ mol.) $AlCl_3$ and 120 g. C_6H_6 at 110° for 10 hrs. resulted 51.5% PhPr, b. 156-8°, 0.860, 1.4941, 40.31 and 30.5% *m*-$C_6H_4Pr_2$, b. 215-18°, 0.9137, 1.5155, 53.88. Condensation of 23 g. (0.5 mol.) EtOH, 99 g. (0.75 mol.) $AlCl_3$ and 80 g. PhMe at 140° for 8 hrs. gave 74% *m*-MeC_6H_4Et, b. 157-9°, 0.8692, 1.4957, 40.28 and the *p*-isomer, b. 160-3°, 0.8607, 1.4962, 40.23 and 20% $MeC_6H_3Et_2$, b. 190-4° (the position of the Et groups was not detd.). A mixt. of 30 g. (0.5 mol.) PrOH, 90 g. (0.7 mol.) $AlCl_3$ and 80 g. PhMe heated at 125° for 4 hrs. afforded 9.5% MeC_6H_4Pr, b. 243-7° and 83% *m*-MeC_6H_4Pr, b. 176-9°, 0.8651, 1.4945, 44.84, and the *p*-isomer, b. 182-5°, 0.8682,

IV. Condensation of [illegible] with naphthalene. I. P. Lukashevich and [illegible] *J. Gen. Chem.* (U. S. S. R.) 7, [illegible] [illegible] and [illegible] parts of [illegible] [illegible] used at [illegible] $AlCl_3$ and produced [illegible] alkylnaphthalenes, I and II [illegible] mols. to 1 of primary alc. [illegible] alkyl groups in the mol. is based on the [illegible]

See other side →

METALLURGICAL LITERATURE CLASSIFICATION

(CONTINUED)

CA Condensation of alcohols with aromatic hydrocarbons in the presence of anhydrous aluminum chloride. III. Condensation of primary alcohols with benzene and toluene. I.P.Tsukervanik and G. Vikhrova. J. Gen. Chem. (U.S.S.R.) 10

the condensation of secondary cyclic alcs. with aromatic hydrocarbons proceeds by intermediate cleavage of H_2O with the formation of cycloalkenes and cycloalkyl chlorides: $C_6H_{11}OH + AlCl_3 \rightarrow C_6H_{10} + AlCl_3OH + HCl$; $C_6H_{10} + HCl \xrightarrow{AlCl_3} C_6H_{11}Cl$; $C_6H_6 + C_6H_{10} \xrightarrow{AlCl_3} PhC_6H_{11}$; $C_6H_{11}Cl + C_6H_6 \xrightarrow{AlCl_3} PhC_6H_{11} + HCl$. C. B.

isomer (identified as m-$C_6H_4(CO_2Me)_2$, m. 62°) and sym-$C_6H_3(C_6H_{11})_3$, m. 68°, identified as tri-Me trimesate, m. 144°. PhMe is less reactive, requiring more $AlCl_3$ and a large excess of PhMe. $C_6H_{11}OH$ (70 g.), 80 g. $AlCl_3$ and 200 cc. PhMe gave 72% of a fraction, bₚ 254-60°, d_4^{20} 0.9343, n_D^{20} 1.5242, M. R. 57.05, consisting of p- and m-$MeC_6H_4C_6H_{11}$, identified as p- and m-$C_6H_4(CO_2Me)_2$, resp., and 18% 3,5-$MeC_6H_3(C_6H_{11})_2$, m. 93.5°, identified as tri-Me trimesate. From the decomps. of $C_6H_{11}OH$ with $AlCl_3$ with the formation of 15-20% C_6H_{10} and 20-35% $C_6H_{11}Cl$ it is assumed that by analogy with tertiary alcs.,

ASM-SLA METALLURGICAL LITERATURE CLASSIFICATION

VIKHROVA, A.G.; RAAG, F.I.

Control of yarn separation on grooved cylinders in doubling operations. Tekst.prom. 22 no.12:22-23 D '62. (MIRA 16:1)

1. Nacahl'nik laboratorii po krucheniyu Leningradskogo nauchno-issledovatel'skogo instituta tekstil'noy promyshlennosti (for Vikhrova). 2. Glavnyy konstruktor spetisal'nogo konstruktorskogo byuro tekstil'noy promyshlennosti (SKBTP) Leningradskogo soveta narodnogo khozyaystva (for Raag).
(Spinning machinery)

SMIRNOV, V.P., inzh., red.; BLOKHINA, N.B., kand. arkh., red.; VIKHROVA, L.T., arkh., red.; KLIMOVA, G.D., red.izd-va; NAUMOVA, G.D., tekhn. red.

[Construction specifications and regulations] Stroitel'nye normy i pravila. Moskva, Gosstroiizdat. Pt.2. Sec.L. ch.3. [Specifications for the design of nurseries and kindergartens] Detskie iasli-sady; normy proektirovaniia (SNiP II-L. 3-62). 1962. 11 p. (MIRA 16:12)

1. Russia (1923- U.S.S.R.) Gosudarstvennyy komitet po delam stroitel'stva. 2. Gosudarstvennyy komitet Soveta Ministrov SSSR po delam stroitel'stva (for Smirnov). 3. Nauchno-issledovatel'skiy institut obshchestvennykh zdaniy Akademii stroitel'stva i arkhitektury SSSR (for Blokhina, Vikhrova).
(Kindergartens) (Day nurseries)

SHUH'MAN, S. S.; VIKHROVA, M. N.

Parasites - Carp

New interesting species of mucous sporozoa. Uch. zap. Len. un. No. 141, 1952.

SO: Monthly List of Russian Accessions, Library of Congress, June 1953, Uncl.

1. VIKHROVA, N.M. GORODETSKAYA, A.V.

2. USSR (600)

4. Streptomycin

7. New data on chemical purification and islotion of penicillin and streptomycin
Antibiotiki 5, no. 4, 1952

9. Monthly List of Russian Accessions, Library of Congress, ~~February~~ 1953. Unclassified.

VIKHROVA, N.

Chromatography as applied to antibiotics. Antibiotiki 7 no.1:3-15 '54. (MLRA 7:5)

(Antibiotics) (Chromatographic analysis)

BUYANOVSKAYA, I.S.; VIKHROVA, N.M.; ANDREYEVA, N.A.

Antibacterial spectrum of the antibiotic actinoxanthine obtained by various production methods. Antibiotiki 2 no.1:17-21 Ja-F '57. (MIRA 12:11)

1. Vsesoyuznyy nauchno-issledovatel'skiy institut antibiotikov.
(ANTIBIOTICS, eff.
antibact. spectrum of actinoxanthine, antibact. spectrum obtained by various prod. methods)

VIKHROVA, N. M.

EXCERPTA MEDICA Sec.4 Vol.11/4 Med.Microb. etc. April 58

806. CHEMICAL INVESTIGATION OF THE ANTIBIOTIC ACTINOXANTHINE. I. INVESTIGATION OF THE METHODS OF SEPARATION AND CHEMICAL PURIFICATION OF ACTINOXANTHINE (Russian text) - Vikhrova N. M., Kryuchkova T. I., Preobrazhenskaya E. V. and Khok-hlova A. S. Antibiotics Inst., Moscow - ANTIBIOT. 1957, 1 (21-24) Illus. 2

The culture fluid of actinomyces 1131 inhibits growth of Ehrlich's adenocarcinoma. It acts also on M. pyogenes aureus. Extraction of the antibiotic was obtained principally by adsorption. Activated charcoal, permutit, silicagel, bentonite, infusoria earth, aluminium oxide and synthetic ion-exchange resins (cationic and anionic) were used for adsorption. After adsorption on charcoal it was not possible to find a satisfactory method for desorption. Much better results were obtained with aluminium o. ide adsorption. Chromatographic purification of the antibiotic on the aluminium oxide column produced 4 layers: dark-brown, light-coloured, orange and a lower adsorbent part. The antibiotic is mostly in the orange layer, and the by-products in the brown layer. The culture fluid was treated sucessively with 3 portions of the adsorbent under static conditions. The first portion of the adsorbent adsorbs 50% of by-products, 2nd and 3rd portions 25 to 28%. Eluates were 4 to 6 times more active than culture fluid but they contained a large amount of difficultly separable inorganic salts. Accordingly, another method was tried. The most promising was a method whereby the antibiotic was salted out from the culture fluid with ammonium sulphate; the concentrate was purified on an Al_2O_3 column, treated with ion-exchange resins and $BaCO_3$, and evaporated in vacuo at 32-34° C. in a stream of CO_2. The dry substance loses its antistaphylococcal activity when stored aerobically, but maintains it for 6 months if stored anaerobically. After salting out, the activity of the substance increases 30-fold. During chromatographic purification there is no change in the concentration of the preparation. The yield is 80-90% The activity decreases after $BaCO_3$ treatment (yield 50%). After purification the preparation strength is 65,000 U./mg. Anti-tumour activity in vitro was 0.2 μg. ml. and in vivo 0.3 μg./ml.

Sviphina Moscow (9)

STRUKOV, I.T.; VIKHROVA, N.M.; NIKITINA, N.M.; TEBYAKINA, A.Ye.; BUYANOVSKAYA, I.S.; SHNEYERSON, A.N.; CHAYKOVSKAYA, S.M.

Phenoxybenzylpenicillin (phenbenicillin) and its microbiological study. Antibiotiki 9 no.1:3-7 Ja '64.

(MIRA 18:3)

1. Vsesoyuznyy nauchno-issledovatel'skiy institut antibiotikov, Moskva.

MIKHROVA, N.M.; STRUKOV, I.T.; TEBYAKINA, A.Ye.; CHAYKOVSKAYA, S.M.; SHNEYERSON, A.N.; DUBOVA, V.G.

Nafcillin and its microbiological properties. Antibiotiki 10 no.1:3-9 Ja '65. (MIRA 18:4)

1. Vsesoyuznyy nauchno-issledovatel'skiy institut antibiotikov, Moskva.

KUZNETSOV, V.D.; SOROKINA, Ye.I.; VIKHROVA, N.M.; KRYUCHKOVA, T.I.; KLEOPINA, G.V.; KHOKHLOV, A.S.

Producer of actinomycin belonging to the fluorescent group of actinomycetes. Trudy Inst. microbiol. no.8:193-201 '60. (MIRA 14:1)

1. Vsesoyuznyy nauchno-issledovatel'skiy institut antibiotikov, Moskva.

(ACTINOMYCETALES) (ACTINOMYCIN)

VIKHROVA, O.K., assistent

Formation of autoantibodies in experimental hypothermia.
Trudy Novosib.gos.med.inst. 27:146-165 '57. (MIRA 12:9)

1. Iz kafedry fakul'tetskoy terapii (zav.prof. G.D.Zalesskiy) i kafedry patofiziologii (zav.dots. G.L.Lyuban) Novosibirskogo meditsinskogo instituta.
(ANTIGENS AND ANTIBODIES) (HYPOTHERMIA)

VIKHROVA, V.Ye.

YATSENKO-KHMELEVSKIY, A.A.; VIKHROVA, V.Ye.; GEYRYAN, M.S.; MOSKALEVA, V.Ye.; TAKHTADZHYAN, A.L., otvetstvennyy redaktor; SUVOROVA, L.D., tekhnicheskiy redaktor.

[Principles and methods of investigating the structure of wood] Osnovy i metody anatomicheskogo issledovaniia drevesiny. Moskva, Izd-vo Akademii nauk SSSR, 1954. 337 p. [Microfilm] (MLRA 8:2)
(Wood)

SOV/5342

PHASE I BOOK EXPLOITATION

Anastas'in, V.F., A.S. Arakelov, A.L. Bobrov, Yu. V. Vikhorev, S.I. Vil'der, I.K. I.K. Glushko, A.M. Gokun, Ya.I. Pin'kovskiy, N.D. Pashkov, G.K. Ryabukha, G.S. Rebenko, F.P. Smurov, D.M. Soskind, N.A. Semsonov, B.A. Semenov, A.B. Suleymanov, A.A. Kharlamov, B.N. Tsar'kov, D.L. Shifrin, and V.I. Sheynman, compilers.

Neftyanoye oborudovaniye v shesti tomakh. t. 4: Oborudovaniye i apparatura dlya pererabotki nefti (Petroleum Equipment in Six Volumes. v. 4: Equipment and Apparatus for Petroleum Processing) Moscow, Gostoptekhizdat, 1959. 294 p. Errata slip inserted. 5,700 copies printed.

Eds. of this Volume: Dmitriy Dmitriyevich Abakumovskiy, and Fedor Pavlovich Smurov; Exec. Ed.: K.P. Svyatitskaya; Tech. Ed.: A.V. Trofimov.

PURPOSE: This catalog-handbook is intended for technical personnel of the petroleum industry.

COVERAGE: The catalog-handbook, comprising six volumes, describes special equipment, apparatus, accessories, instruments, tools and devices manufactured in the Soviet Union for use in the petroleum industry. The present volume (IV) contains information on petroleum-processing equipment and apparatus as well as auxiliary

P

Appe

1.

2.

AVAILABLE.

Card 2/2

Card 1/2

...eries.

...cessing Apparatus 5

...um-Refining Proc... 85

...les ...nifold burners 263

288

292

VK/wrc/gmp
7-29-61

SVETKIN, Yu.V.; MINLIBAYEVA, A.N.; VIKHRYAKOVA, L.I.

Reaction of ketene with nitrogen-containing bases. Part 12. Chloroacetanilide pyridinates. Zhur.obshchkhim. 32 no.10:3227-3230 O '62. (MIRA 15:11)

1. Bashkirskiy gosudarstvennyy universitet imeni 40-letiya Oktyabrya.

(Acetanilide) (Pyridine)

VIKHTENKO, I. I. Cand Agr Sci -- (diss) "Fertilization of cabbages under irrigation with subterranean waters under conditions of Donbas." Mos, 1969. 14 pp including cover (Mos Order of Lenin Agr Acad im K. A. Timiryazev), 110 copies (KL, 44-69, 128)

VIKHTENKO, I.I., aspirant

Effectiveness of fertilizer application to cabbage on fields irrigated by underground waters under conditions existing in the Donets Basin. Izv.TSKhA no.4:235-240 '59.
(MIRA 12:11)
(Donets Basin--Cabbage--Fertilizers and manure)

VIKHTER, I.I.

Soldering and heat treatment of hard-alloy cutting tools. Stan. i instr. 26 no.2:35-37 Fe '55. (MLRA 8:6)
(Metal cutting tools)

VIKHTER, I.I.

VIKHTER, I.I.

Hardening cutting tools made of rapid steel. Stan.i instr. 28 no.8:38 Ag '57. (MLRA 10:9)
(Cutting tools) (Tool steel--Hardening)

VIKHTER, I. I.

121-8-16/22

AUTHOR VIKHTER, I.I.

TITLE ~~The Hardening of~~ Tools Made of High-Speed Steel (Zakalka instrumentov iz bystrorezhushchey stali. Russian)

PERIODICAL Stanki i Instrument, 1957, Vol 28, Nr 8, pp 38 - 38 (U.S.S.R.)

ABSTRACT On the occasion of the heat treatment of tools with abrupt transitions of cross sections cracks often develop, as is the case with angle cutters, which are produced with diameters of from 40 - 300 mm and which differ considerably as to thickness at the periphery as well as at the opening. After heat treatment both flat cracks of a length of from 2 - 3 mm and large cracks of different lengths along the whole length of the tooth develop. Because of the complicated method of production of cutters, costs are high and waste after heat treatment amounts to up 70 %. Investigations showed that the cracks always originate in the curvature of the outer flank of the tooth (on the outer diameter) and that the crack is smooth in the beginning but later becomes rough and similar to a fatigue crack in character. The formation of the curvatures of the tooth at both flanks is carried out by means of two different gear cutters; the greatest consumption of the gear cutters was observed to take place at the point of connection of the two surfaces when the unfinished cutters are worked and that is when it becomes blunt. As long as the gear cutter is sharp the metal is cut but as soon as it becomes blunt the metal is sheared

Card 1/2

121-8-16/22

The Hardening of Tools Made of High-Speed Steel

and torn off and the boundary layer begins to press which causes stresses and leads to the formation of cracks which are enlarged by the heat treatment. In order to avoid this disadvantage grinding of these parts (before the heat treatment) was introduced to remove the deforming upper layer of the metal. Thus the waste was completely stopped.

ASSOCIATION Not given
PRESENTED BY
SUBMITTED
AVAILABLE Library of Congress

Card 2/2

VIKHTER, I. I.

USSR/ Engineering - Machine tools

Card 1/1 Pub. 103 - 16/19

Authors : Vikhter, I. I.

Title : Soldering and thermal treatment of infusible tools

Periodical : Stan. i istr. 2, 35 - 37, Feb 1955

Abstract : Certain methods for soldering-on and thermal treatment of infusible machine tools, developed by the Metallurgical Plant "FREZER" are described. The new methods pertain mostly to the processes of soldering-on and thermal treatment of cylindrical drill bits 6 - 12 mm in diameter, conical drill bits, reamers, and countersink bores. The attachment, used for fastening tools to be soldered on, is shown in drawing. Graph; drawings.

Institution: .....

Submitted: .....

VIKHTER, Ya., inzh.

In institutes and laboratories. Strei. mat. 2 no.10:31-32 O '56. (MIRA 12:3)
(Gypsum)

VIKHTER, Ya., inzhener.

The Kuybyshev Combine puts out a high quality molding gypsum. Strei.mat., izdel.i konstr.2 no.3:28-29 Mr '56. (MLRA 9:7)
(Kuybyshev--Gypsum)

VIKHTER, Ya.I., inzh.

Why sand-lime wall panels have deteriorated in Voronezh. Stroi. mat. 11 no.6:30-31 Je '65. (MIRA 18:7)

VIKHTER, Ya.I., inzh.; GUTSKOV, V.Ye., inzh.; ROZENBERG, Ya.M., inzh.

Silicate elements and details for construction of state farms. Stroi. mat. 8 no.4:3-4 Ap '62. (MIRA 15:8)
(Sand-lime products) (Precast concrete construction)

VIKHTER, Yakov Isaakovich. Primimali uchastiye: LUTSIN, A.V.; RASOVSKIY, V.K.; ROZENTAL', N.K.; RATINOV, V.V., nauchnyy red.; STRATILATOVA, K.I., red.; TOKER, A.M., tekhn. red.

[Manufacture of gypsum]Proizvodstvo gipsa. Moskva, Proftekhizdat, 1962. 245 p. (MIRA 16:1)

(Gypsum)

VIKHTER, Ya.I.; MAK, I.L.; SHVAGIREV, M.P.

[Production of gypsum and gypsum construction parts] Proizvodstvo gipsa i gipsovykh stroitel'nykh detalei. Moskva, Promstroiizdat, 1954. 142 p. (MIRA 8:1D)

VIKHTER, Yakov Isaakovich; MAK, Isaak L'vovich; SHVAGIREV, Mikhail Petrovich; PECHURO, S.S., nauchnyy redaktor; TYUTYUNIK, M.S., redaktor; PANOVA, L.Ya., tekhnicheskiy redaktor.

[Production of gypsum and gypsum construction elements] Proizvodstvo gipsa i gipsovykh stroitel'nykh detalei. Moskva, Gos. izd-vo lit-ry po stroit. materialam, 1954. 140 p. (MLRA 8:2)
(Gypsum) (Building materials)

VIKHTIR - YA.

Making high strength plaster of Paris. Ya. Vikhtir. *Stroitel'-Materialy* 2, No. 3, 23-9 (1956).—Plaster of Paris which begins to set in 4-5 min. is made by heating 45-60-mm. crushed gypsum with add. steam at 124° under 1.3 atm. for 6-8 hrs. and drying it at 140-150° with hot air for 10 hrs. J. D. Cyl.

VIKHTERLE, O.

VIKHTERLE O. Acad., VESELY, (prof.)

"On Cation Polymerization of Olefines."

Inter-vuz Scientific Conference (Mezhvuzovskiye nauchnyye Konferentsii)

Vestnik Vysshey Shkoly, 1957, # 9, pp 73 - 76 (USSR)

Abst: In January 1957, the Second All-Union Conference on Photosynthesis took place, organized by the institute of Plant Physiology of the Academy of Sciences, USSR, and by the Facultys of Soil-Biology of the Moskva Univsersity. About 700 representatives of 130 Scientific-research institutes, vuzes and ministries were present. The indroductory report was made by Academician A. L. Kursanov who described the development of photosynthesis during the last ten years and invited the scientists to concentrate their work on the application of radioactive and stable isotopes. Nearly 100 reports were read: 13 on photochemistry, 9 on the investigation of chloroplast structure, 19 on the investigation of pigments, 9 on the photosynthesis of water plants, bacteria, etc.

VIKTOROVA, Liudmila

News in the production of essential oils. Ratsionalizatsiia 14 no.10:12-13 '64.

TERENT'YEV, A.P.; KURNAEVA, Ye.G.; PANOVA, G.V.; VIKTOROVA, N.M.

Chelate compounds with optically active ligands. Part 3: Bis(o-hydroxyacetophenone)-(--)-propylenediimine and its chelate compounds with copper, nickel, and cobalt (+2). Zhur. ob. khim. 34 no.9:3025-3028 S '64. (MIRA 17:11)

11 H

Cu

The pharmacodynamic action of magnesium. V. Viki. *Problemy biol. med.* (Moscow) 1935, 348-56; *Chem. Zentr.* 1939, I, 905.—A review of the anesthetizing action of Mg salts. On the basis of expts. reported the view is expressed that the effect consists in a curarization and an analgesia due to paralysis of the sensory nerve endings.

V. concluded that Mg salts do not produce a general anes
thesia

M. G. Moore

ASM-SLA METALLURGICAL LITERATURE CLASSIFICATION

VIKIC, Nikola, inz. (Zagreb)

Orthogonal measurement of details with the use of minute book.
Geod list 17 no.1/3:69-70 Ja-Mr '63.

ACCESSION NR: AP4018363 S/0120/64/000/001/0053/0056

AUTHOR: Vikin, B. P.; Perfil'yev, L. P.

TITLE: Use of a combined-coincidence gamma spectrometer in the analysis of complicated decay modes

SOURCE: Pribory* i tekhnika eksperimenta, no. 1, 1964, 53-56

TOPIC TAGS: gamma spectrometer, spectrometer, decay mode, complicated decay mode, Compton electron, Compton electron elimination

ABSTRACT: A method for the observation of a combined-coincidence spectrum for the lowest levels of nuclei having a complicated decay mode is described. An outfit of β, γ, E_γ-coincidence is offered; here, E_γ is the energy of the highest level equal to the sum of the energies of two cascade γ-quanta when that level is discharged, and β is part of the continuous beta-spectrum. The outfit permits observing only that part of the gamma-spectrum which is determined by the

Card 1/2

ACCESSION NR: AP4018363

number of recorded isotope levels. The number of levels is preselected which makes the use of a combined-coincidence gamma spectrometer possible. A spectrum of $\beta\gamma(\gamma_1 + \gamma_2)$ coincidence of $Eu^{152+154}$, was obtained with the summator aligned to the energy of the 1,124-kev level; the discriminator threshold in the beta channel was 220 kev. A spectrum with Σ_β about 170 kev was also obtained. Orig. art. has: 4 figures.

ASSOCIATION: Voronezhskiy gosudarstvenny*y universitet (Voronezh State University)

SUBMITTED: 28Mar63 DATE ACQ: 18Mar64 ENCL: 00

SUB CODE: NS NO REF SOV: 002 OTHER: 001

Card 2/2

VIKIN, B.P.; PERFIL'YEV, L.P.

Application of a gamma-spectrometer of overall coincidences to the analysis of complex decay schemes. Prib. i tekh. eksp. 9 no.1:53-56 Ja-F '64. (MIRA 17:4)

1. Voronezhskiy gosudarstvennyy universitet.

USSR/Physics - Ultrasonics FD-2367

Card 1/1 Pub. 146 -32/34

Author : Aksenov, S. I.; Vikin, B. P.; and Vladimirskiy, K. V.

Title : Excitation of ultrasonic oscillations by pondermotive forces

Periodical : Zhur. eksp. i teor. fiz. 28, 762-764, Jun 1955

Abstract : In their work with apparatus designed to investigate nuclear magnetic resonance (DAN SSSR, 96, 1954) the authors observed at frequencies of the order of several megacycles interfering resonance effect, which as was explained arises in consequence of the excitation by pondermotive forces of ultrasonic oscillations in the copper conductor comprising the coil of the spectrometer. They observed a number of resonance peaks, with amplitudes considerably exceeding the noise level of the device, for each of the coils during variation of the operating frequency, relative width of the peaks being equal to 1:100 in order of magnitude and the amplitude of the peaks increasing linearly with increase of the constant component and depth of modulation of the field. The authors obtained the eigenvalues of the product of the wave number times radius of the conductor by means of numerical solution of equations set up. Three references.

Institution : Physical Institute im. P. N. Lebedev, Academy of Sciences USSR

Submitted : February 12, 1955

VIKKER, B.Z., dotsent

Some characteristics of uterine-placental circulation. Trudy OMI no.25:199-204 '59. (MIRA 14:10)

1. Iz kafedry akusherstva i ginekologii Omskogo meditsinskogo instituta imeni Kalinina, zav. kafedroy prof. A.B.Gillerson.
(BLOOD—CIRCULATION) (UTERUS, PREGNANT)

VINNER, D. A.

On 22 February 1946, at the Power Engineering Institute Imeni Molotov, defended his dissertation on "Automatic Regulation of the Frequency and Active Power of Electrical Systems". Official opponents - Acting Member of the Academy of Sciences, Ukrainian SSR, Professor S. A. Lebedev, and Candidate of Technical Sciences L. S. Gol'dfarb.

So: Elektrichestvo, No 4, April 1947, pp 90-94 (U-5577, 18 February 1954)

A study was made of the basic problems of the automatic regulation of the frequency and active power in systems with synchronous turbo and hydro generators. General information was presented concerning the speed regulators of primary motors, regulation characteristics, and methods of distorting them. The method and systems of automatic frequency regulation were systematized, and descriptions were presented of some of the most widely used types of automatic frequency regulators of various firms. An examination was made of the kinetics of the process of automatic frequency regulation with the generator operating in an isolated state and with several multiple machine working in parallel, as well as the kinetics of the processes of simultaneous automatic regulation of frequency and active power in the case of two mutually interconnected electrical systems.

So: IBID

VIKKER, I.V.

Distribution of cold hardening in the head of railroad rails. Izv. AN SSSR Otd.tekh.nauk no.2:75-78 F '54. (MLRA 7:7)

1. Predstavleno akademikom N.T.Gudtsovym.
(Metals--Cold working) (Railroads--Rails)

VIKKER, I. V.

FD-817

USSR/Engineering

Card 1/1 : Pub. 41 - 9/17

Author : Vikker, I. V.

Title : Distribution of work hardness in the head of railroad rails

Periodical : Izv. AN SSSR, Otd. tekh. nauk, 2, 75-78, Feb 1954

Abstract : Gives results of experiment conducted to determine depth of plastic deformation and its intensity at various distances from the top surface of railroad rails in service. X-ray structural analysis was used as a method of investigation. Table. Graphs. 6 references.

Institution : --

Submitted : By Academ N. T. Gudtsov, January 20, 1954

S/123/62/000/012/007/010
A004/A101

AUTHORS: Kovalev, Ye. A., Vikker, I. V.

TITLE: The resistance of diffusion coatings to the corrosion of the turbine blades of gas turbine locomotives

PERIODICAL: Referativnyy zhurnal, Mashinostroyeniye, no. 12, 1962, 39 - 40, abstract 12B235 ("Vestn. Vses. n.-i. in-ta zh.-d. transp.", 1962, no. 1, 36 - 37)

TEXT: The author presents the results of tests carried out by TsNII MPS to find methods for preventing the vanadium corrosion of the turbine blades of gas turbine locomotives. The burning of heavy liquid fuel in the gas turbine-mazout with an elevated vanadium content (up to 0.025%) causes ash depositions on the turbine blades with 60 - 75% vanadium pentoxide which, at temperatures of over 650°C, results in the rapid corrosion destruction of the blades. To prevent corrosion, a protective coating is applied to the blade surface by the diffusion metallization method. Coatings were tested which were applied by aluminum siliconizing, calorizing, chrome plating and siliconizing. It is pointed out that chrome-

Card 1/2